MODEL
S510F
ULTIMATE SPORTER
HIGH POWER MODELS

AIR ARMS
World Class Air Rifles

USERS HANDBOOK

THIS HANDBOOK REFERS TO S510F ULTIMATE SPORTER HIGH POWER MODELS

Model shown with optional scope

***** SAFETY CODE *****

1 - TREAT THIS AIR RIFLE AS IF LOADED.
2 - NEVER POINT IT AT ANYONE, EVEN IF UNLOADED.
3 - NEVER LEAVE THIS RIFLE UNATTENDED WHEN COCKED OR LOADED.
4 - ALWAYS BE SURE OF WHAT LIES BEYOND YOUR TARGET.
5 - ALWAYS CONDUCT YOURSELF IN A SPORTSMAN-LIKE MANNER.

ALWAYS BE AWARE THAT YOUR ACTIONS WILL BE UNDER THE SCRUTINY OF OTHER MEMBERS OF THE PUBLIC WHO MAY NOT SHARE YOUR ENTHUSIASM FOR AIR WEAPONS. BAD PRACTICES PROMOTE BAD PUBLICITY. DO NOT JEOPARDISE YOUR FUTURE ENJOYMENT BY MISUSING THIS WEAPON.

PLEASE READ THIS MANUAL BEFORE USING YOUR NEW RIFLE, IT CONTAINS IMPORTANT SAFETY INFORMATION AND INSTRUCTION ON ADJUSTMENT AND MAINTENANCE.

WARNING ! - UNAUTHORISED DISASSEMBLY OF THIS RIFLE WILL INVALIDATE THE MANUFACTURERS WARRANTY

Important information

Before leaving the factory this rifle was Q.A. inspected and test fired using Air Arms pellets to check operation and final adjustment.

It was dispatched in a sealed purpose designed box. Air Arms may not be responsible for any damage to the contents or missing items if the box is not original, if it is damaged or the seals are not intact.

Air Arms cannot be held responsible for damage or missing items due to transit damage, mishandling or being tampered with after leaving the factory.

If this rifle is not received in the original box with the seals intact, please examine carefully for any damage, missing tools or documentation.

In the first instance any problems or complaints regarding this product should be referred to the supplier.

The air cylinder is a highly pressurised unit that must not be modified in any way. Serious personal injury may result if this, and the advice below is not followed.

Do not pressurize the cylinder if there are any surface abrasions or dents. Contact Air Arms for advice.

Do not store the rifle in places with, or near sources of high temperature such as fires or boilers.

Do not attempt to dismantle when pressurised.

Do not pressurize beyond the stated filling pressure (see filling instruction section). Damage caused by such action is not covered by the manufacturers warranty.

Only use clean, filtered and dry compressed air. Never use any other gas, particularly industrial or welding gases such as oxygen, carbon dioxide, acetylene, hydrogen, argon, etc.

If compressed air is being used other than from a diving shop, the inside of the cylinder should be inspected for corrosion at least annually. If in doubt contact Air Arms for advice.

In any event the cylinder should be inspected every two to three years depending upon usage.

Air Arms can provide this service at a reasonable cost.

To maintain this rifle in good working order it should be serviced annually by a competent gunsmith, your supplier may be able to provide this service or contact air arms.

A reasonable amount of advice will be provided to enable the end user to service their own rifle, however this is at the discretion of Air Arms and may not be given in all cases.

The velocity of this rifle has been set using Air Arms field pellets. If any other make or type of pellet is to be used the rifle must be re-tested with the pellet that is to be used, to ensure the muzzle energy is within the limits determined by current legislation.

Due to the nature of hand pumps and their relative inefficiency in removing moisture from the compressed air , the chances of corrosion damage to the cylinder and other internal components are increased.

Therefore the rifle should be regularly serviced and/or checked for any signs of damage by a competent gunsmith.

Air Arms recommend using a dry pack filter kit on any hand pumps used to fill our air rifles.

If accessories not manufactured by Air Arms are used on this rifle, Air Arms can not be held responsible for any loss of performance. Contact your supplier or Air Arms for any advice on this matter.

Do not store this rifle in a damp place such as garden shed or garage.

Do not store this rifle in a plastic or PVC gun bag without first applying a surface corrosion inhibitor.

Always ensure the loading bolt is fully closed before firing.

Important information continued

CHECKING VELOCITY

1 Use a reliable chronograph to check velocity, (the formula below requires the reading to be in feet per second - FPS)
2 Use fine measurement scales to weigh the pellet, If scales are unavailable the pellet weight may be stated on the pellet container lid or contact the supplier. (The formula requires the weight to be in grains). To convert from grams to grains multiply by 15.432, i.e. 0.69 grams x 15.432 = 10.65 grains.
3 To find the muzzle energy in ft/lbs use the formula (FPSxFPSxGrains)/450240, i.e. (700x700x10.65) = 5218500 divide by 450240 = 11.59.

CURRENT LEGISLATION LIMITS NON-FAC HOLDERS, IN THE UK, TO AIR RIFLES WITH A MAXIMUM OF 12ft/lbs MUZZLE ENERGY.

WARNING! IT IS A VERY SERIOUS OFFENCE TO BE IN POSSESSION OF AN AIR RIFLE THAT YOU ARE NOT CERTIFICATED FOR. CONVICTION CAN RESULT IN CONFISCATION OF YOUR RIFLE, A HEAVY FINE OR IMPRISONMENT, EVEN A COMBINATION OF ALL THREE.

***** LIMITED LIABILITY WARRANTY *****
UK Customers only.

T*his product is warranted to the retail customer for 12 months from date of purchase against defects in materials and workmanship and is transferable to any subsequent owner.*
Proof of purchase is required to receive warranty repairs, retain your purchase invoice and return the warranty registration card as soon as possible after purchase. The warranty card must show the dealer/ supplier name and address and date of purchase.

What is covered

Replacement parts & labour on a 'back to base' basis, return transportation to the consumer (mainland UK only).

What is not covered

Transportation from the consumer to Air Arms.

Damage caused by misuse, abuse, lack of routine maintenance, transit damage between the dealer/ supplier and the consumer or unauthorized disassembly.

Parts subject to normal wear and tear.

Any other consequential cost incurred by the consumer.

Return transportation to consumers outside mainland UK.

No warranty is implied as to the fitness for any particular purpose.

AIR ARMS RESERVE THE RIGHT TO ALTER THE CONSTRUCTION, APPEARANCE OR PERFORMANCE OF ANY PRODUCT WITHOUT PRIOR NOTIFICATION. ALL ILLUSTRATIONS ARE FOR INFORMATION PURPOSES ONLY AND DO NOT NECESSARILY SHOW THE EXACT MODEL THAT WAS PURCHASED.

OPERATING INSTRUCTIONS

COCKING

Hold securely in one hand and with the other pull the cocking lever out and to the rear. At the end of the stroke the magazine will index and present a new chamber, also the trigger mechanism will engage. This can be determined by the trigger blade ‘kicking’ forward at the end of the cocking stroke.

The effect required to cock the gun is quite low so minimal force should be used.

Note ! It is very important that the cocking lever is pulled back to the correct position. In one positive motion. The magazine indexes to the next pellet position as the bolt is retracted and it is possible for a partial index if the lever is not pulled back fully.

If you find the mechanism has not cocked completely but the magazine has indexed, Re-cock but before closing the bolt, remove the magazine and manually index it back to the empty chamber. Replace the magazine and fire as normal. If this procedure is not followed it is likely that you will load a second pellet into the barrel. Push the lever back to the forward position. The rifle is now cocked and loaded, treat with caution.

MOUNTING/DEMOUNTING THE MAGAZINE & PELLETS

DEMOUNTING

Fully cock the rifle, grip the magazine and slide out of the bolt housing without lifting. **Do not** attempt to lift vertically as damage to the indexing spring will result.

To refit the magazine, fully cock the rifle, grip the magazine and slide in the bolt housing applying downward pressure with the fore finger to keep the base of the magazine against the bottom of the slot in the bolt housing. Take care not to damage the indexing spring.

LOADING PELLETS

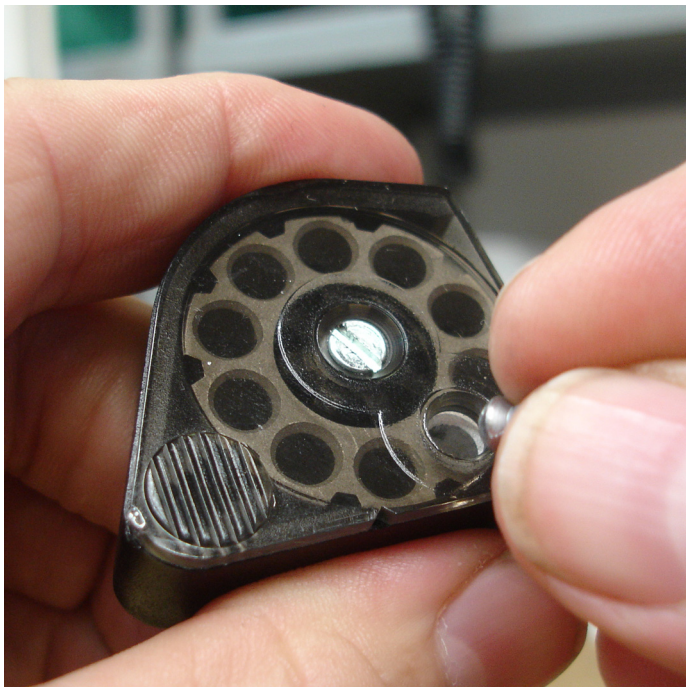

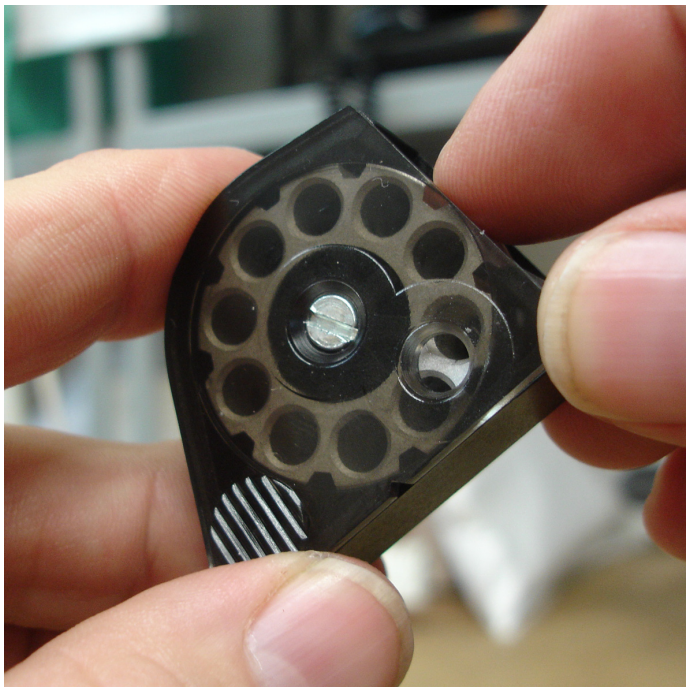

Hold the magazine and drop a pellet into the chamber. Manually index to the next empty chamber and repeat until the magazine is full.

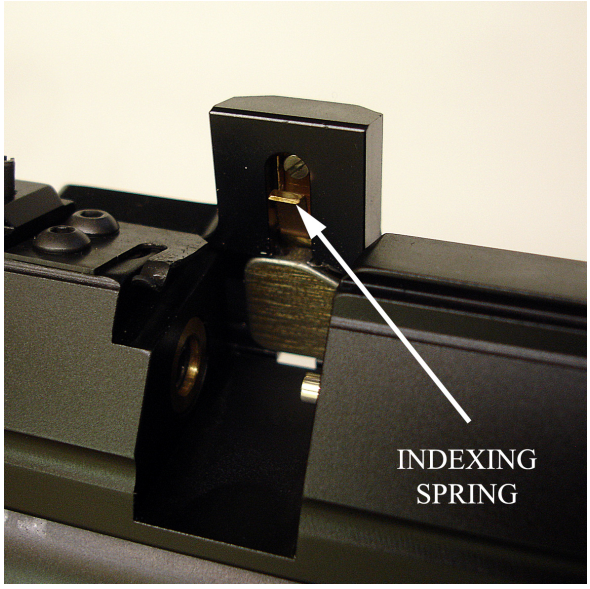

Be very careful not to damage the indexing spring when de-mounting or mounting the magazine. Follow the instructions carefully.

A small drop of oil should be applied to the magazine 'O' ring to keep it moist, and increase its life span.

TRIGGER ADJUSTMENTS

The S510 models all have a two stage unit with adjustment to both stages plus a weight of pull adjustment. It is easy to upset the balance between the two stages and make the trigger inoperable if incorrectly adjusted.

If you have no experience of adjusting two stage triggers seek guidance or leave the trigger as set by the factory.

Note! Incorrectly adjusted trigger mechanisms are not covered by the manufacturers warranty. It is not possible to test this rifle with an incorrectly adjusted trigger, therefore all triggers leave the factory with correct adjustment. **WARNING!** Please note that it is possible to stop the safety button working with incorrect trigger adjustment. AN INCORRECTLY ADJUSTED TRIGGER CAN MAKE THE RIFLE UNSAFE TO HANDLE.

DESCRIPTION OF OPERATION

The S510 rifles have a true two stage trigger mechanism. This means that as the trigger is pulled the bottom sear gradually disengages with the top sear until the two disengage completely and the rifle goes off. If the pressure on the trigger is released at any point before full disengagement, the bottom sear will automatically return back to full engagement. This type of trigger allows very fine but safe operation because it is the release of the 2nd stage that actually makes the rifle fire. This arrangement is vastly superior to pseudo two stage triggers where the first stage is just a pivoting trigger blade that does not move sears. The down side is that they are more difficult to adjust correctly.

ADJUSTMENT

There are three adjuster screws, A-B-C.
The weight of pull adjuster (A) is located in the front of the trigger guard. Clockwise rotation increases pull weight. If adjusted too far the spring will become coil-bound and prevent trigger operation.

The second stage adjuster (C) is the rear screw located in the trigger blade. This screw determines the exact point that the 2nd stage starts. If the 1st stage screw is incorrectly adjusted this screw may not have any effect.

The first stage adjuster (B) is the front screw located in the trigger blade. This screw determines the length of travel before the 2nd stage starts. Clockwise adjustment reduces the first stage travel.

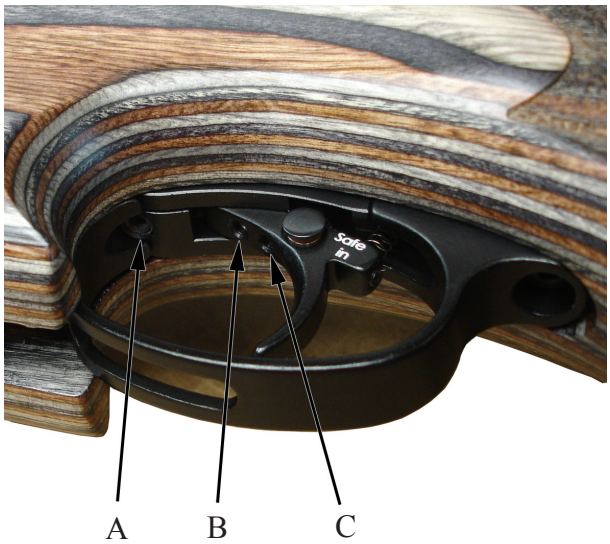

This rifle is fitted with a manual safety button located in the trigger blade.
To make the rifle safe the button must be pressed until it is flush with the side of the trigger blade.

Please note that it is possible to stop the safety button working with incorrect trigger adjustment.

With the button pressed in the rifle is safe.

With the button out the rifle is now ready to fire.

ITEM NO.	PART NUMBER	DESCRIPTION	QTY.
1	S420S-2	TRIGGER BLADE - BLACK ANODIZED	1
	S420GS-2	TRIGGER BLADE - GOLD PLATED	
2	S521-2A	SAFETY BUTTON - PART ONE	1
3	S521-2B	SAFETY BUTTON - PART TWO	1
4	S526	SAFETY BUTTON O RING	1
5	S523	BALL BEARING	1
6	S522	SAFETY BUTTON SPRING	1
7	S524	SCREW	1
8	TX432	ADJUSTER SCREW LOCKING PAD	1
9	S421	SCREW	2

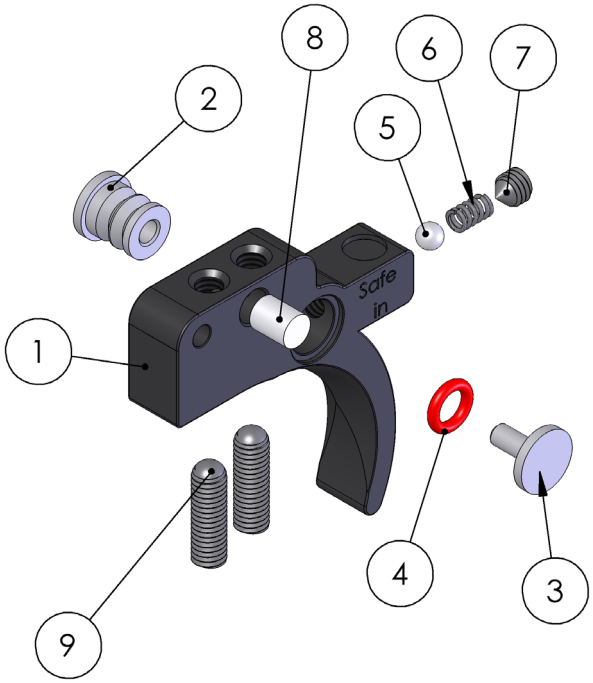

POWER ADJUSTER

The S510 extra is fitted with a power adjuster on the side of the rifle. This can be used to adjust the power at any time by just turning clockwise to increase and anti-clockwise to decrease the power. Adjusting the power between shots will not harm the rifle.

On the left hand side of the rifle is a indicator to help select your most common power settings + = High. - = Low. The marks do not indicate a particular power as this would change depending on the pellets used.

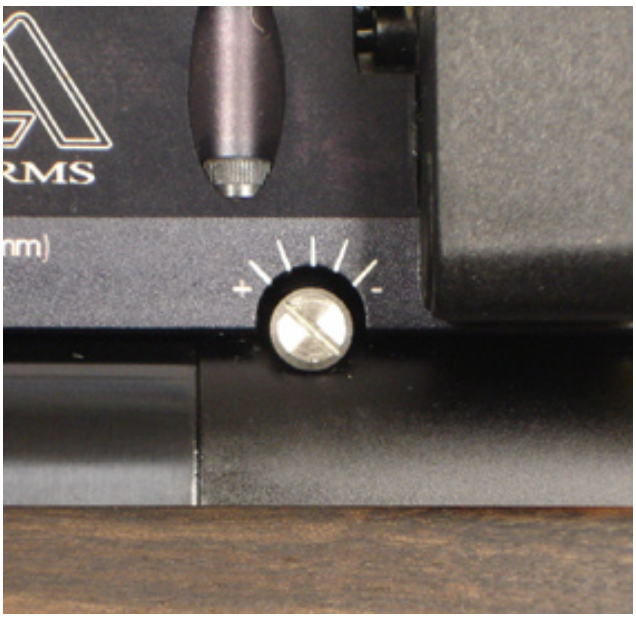

FILLING INSTRUCTIONS

NOTE! ONLY USE CLEAN, DRY AND FILTERED COMPRESSED AIR, PREFERABLY FROM A DIVING SHOP. OVER PRESSURIZATION MAY DAMAGE THE CYLINDER BEYOND REPAIR.

First the female part of the filling kit (this was supplied with the rifle) must be fitted to your filling equipment. The female part (S475) has a 1/8th BSP male thread that screws directly into the hose of your pump or bottle.

Next remove the dust cover from the end of your rifle. This is achieved by unscrewing the cover in an anti-clockwise direction.

Once the connector is exposed the female part of the filling kit can be place on the male and press all the way on making sure that the 'O' rings on the male part are covered.
It is a wise precaution to hold the female part of the connector, during the filling procedure, as shown in the pictures below. This will ensure the female adaptor is located completely over the male part and prevent any accidental dislodging of the connector before you start to refill the cylinder.

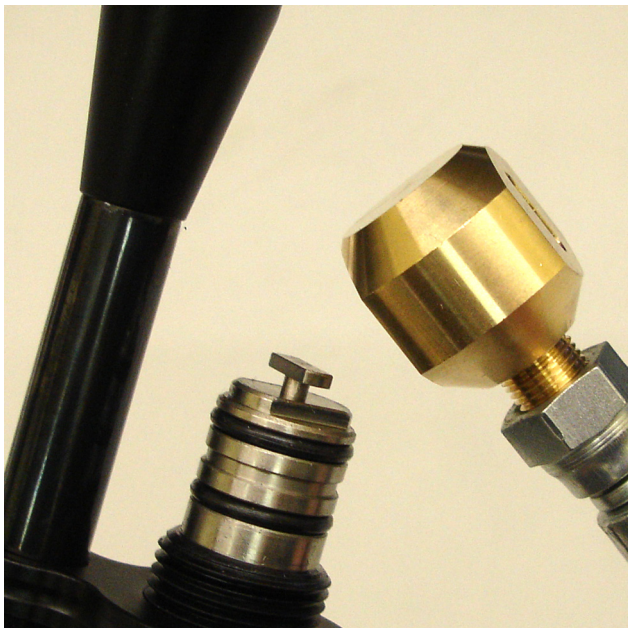

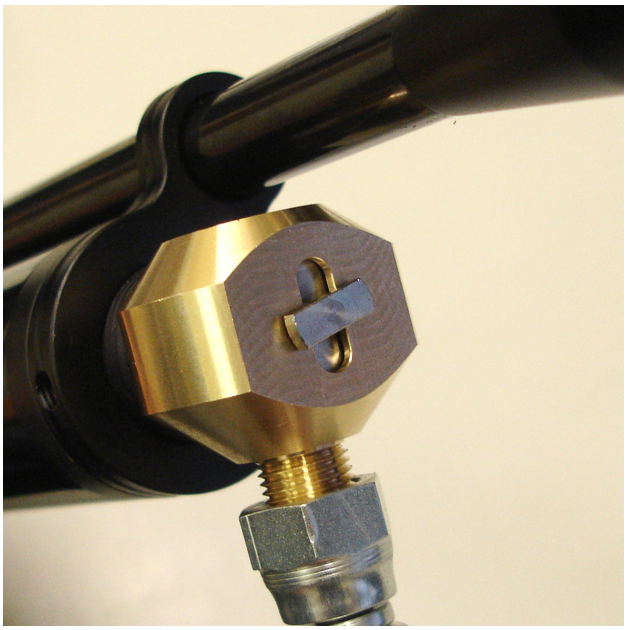

Using hand pumps

The procedure for using hand pumps is the same as for bottle. It is more important to turn the female on the gun to lock it in place.

When using the pump it must be remembered that the first few pump are filling the hose and NOT the gun. When the pressure in the hose equalizes to that in the gun, the gun will start to fill.

It can take some effort to fill the gun using a pump and we recommend using the pump to top up instead of filling from empty.

With the female in place the gun can now be filled.

If the rifle is empty the mechanism will need to be cocked to allow the firing valve to close. If the rifle is not cocked when the bottle is opened or the pump used, the air will past the valve and exhaust through the barrel.

Check that the bleed valve on the filling equipment is closed (turn clockwise to close) then slowly open the main valve on bottle or start using the pump. The pressure in the hose will equalise and then the rifle will start to fill.

If you are filling your rifle from empty there may be some air exhausted through the barrel until the air pressure is sufficient to over come the firing valve spring (S306) this will happen at approximately 50 bar (750psi).

The filling pressure of the S510 is 200 bar (2900psi). Filling to a higher pressure will not increase either power or number of shots. Over filling will lower the power and may cause irreparable damage to the cylinder.

Once the filling pressure has been reached, close the valve on the bottle or stop pumping, open the bleed valve on the filling kit (to vent the hose, if you do not vent the hose you will not be able to remove the female from the rifle). Now the female connector can be removed from the rifle and end cap (E483BK) can be replaced over the male connector ensuring not to overtighten.

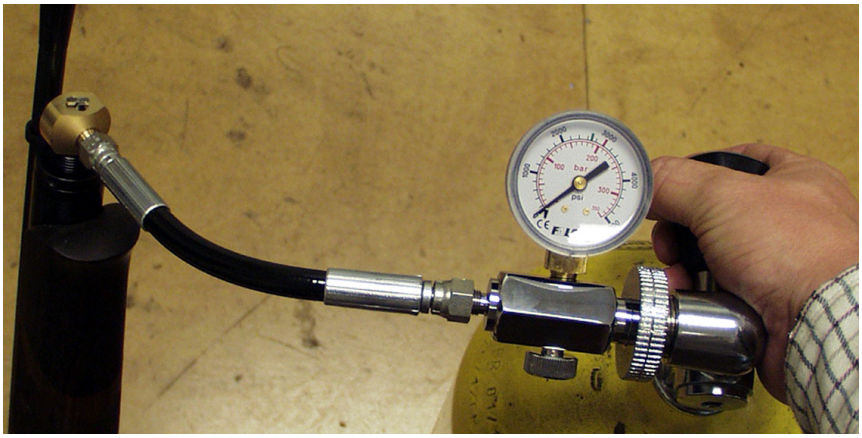

The S510 Ultimate Sporter range of rifles are fitted with a pressure indicator mounted on the underside of the rifle just in front of the stock screw. This provides the user with a visual check on the amount of air remaining in the cylinder this indicator should not be used during the filling process as the gauge reaction speed has been slowed to prevent damage whilst filling. After filling the gauge can take several seconds to synchronize with the air in the cylinder. The gauge below shows a guns with just over 100 bar of pressure. Although every gun is slightly different the recommended refill pressure for the S510 is between 100 and 110 bar. **Always use the gauge on the filling kit.**

Please note: There is not needle on the ultimates sporter gauge, instead there are two zones, green and red. The line between to two replaces the needle on a traditional pressure gauge. More green means more air.

NOTE: On the front of the cylinder is an engraved warning reading....

READ MANUAL. MFP 200bar. MSP 200bar. DOM **/**/** **.
INSPECT BI-ANNUALLY.

MFP	=	Maximum Filling Pressure. The pressure is stated.
MSP	=	Maximum Safe Pressure. The pressure is stated.
DOM	=	Date of Manufacture. The date is stated.

WARNING NOTE CONCERNING 300 BAR BOTTLES.

WITH THE ADVENT OF THE 300 BAR BOTTLE IT SHOULD BE NOTED THAT CARE HAS TO BE TAKEN WHEN FILLING YOUR RIFLE.
THE FILLING PROCEDURE DESCRIBED IN THIS MANUAL MUST BE FOLLOWED TO AVOIDED DAMAGE TO THE RIFLE, PARTICULARLY THE SLOW OPENING OF THE VALVE ON THE BOTTLE. OPENING THE VALVE QUICKLY WILL ALLOW UP TO 300 BAR OF PRESSURE INTO THE CYLINDER AT ONCE, THIS COULD CAUSE SERIOUS PERSONAL INJURY OR IRREPARABLE DAMAGE TO THE CYLINDER.

MAINTENANCE

FIXINGS

Regularly check the tightness of all fixings. However do not be tempted to over tighten as some parts are made from aluminium and stripped threads may result. Stripped threads are not covered by the manufacturers warranty.

BARREL

For ultimate accuracy, clean and re-lube the barrel frequently. It is difficult to advise how often is best for every circumstance, but every 250 shots is not too often if the desire is to keep the barrel in the best possible condition.

The correct materials are very important. Air arms only uses products made by Napier. Listed below is the Napier product and a more generally available alternative. If possible use napier for the best results.

CLEANER:	'NAPIER GUN CLEANER', ALTERNATIVELY WHITE SPIRIT.
OIL:	'NAPIER GUN OIL', ALTERNATIVELY '3 IN 1' OIL.
PULL-THROUGH PAD:	'NAPIER RIFLE CLEAN', ALTERNATIVELY SOFT COTTON CLOTH.
PULL-THROUGH LINE:	'NAPIER PULL THROUGH KIT' , ALTERNATIVELY 20lb FISHING LINE

As a rule cleaners and oils intended for shotguns and small/full-bore weapons are not suitable.

1. Cut a piece of line three times the length of your barrel, fold in half and tie ends together. Remove silencer if fitted. Open loading bolt.
2. Feed un-knotted end down barrel from the muzzle end until folded end protrudes out 50mm.
3. Cut a 100mm length of 'rifle clean' or 100 x 50mm piece of cloth and pass it between the protruding loop. Spray the pad with 'gun cleaner' or white spirit, turn the rifle upside down and pull the line back through the barrel slowly.
4. Repeat steps 2&3 until the pad is clean.
5. Repeat steps 2&3 once more without any cleaner on the pad to dry the barrel.
6. Repeat steps 2&3 once more with the pad sprayed with 'gun oil' or 3 in 1 oil.

IMPORTANT : THE REASON FOR TURNING THE RIFLE UPSIDE DOWN IS TO PREVENT EXCESS CLEANER/OIL FROM PASSING DOWN THE TRANSFER PORT INTO THE FIRING VALVE CHAMBER.

LUBRICATION

Lubrication of the internal mechanism is not covered in this handbook. This is best performed by a competent gunsmith or the factory and in any case should not be required until the annual service.

Apply a small dab of grease or oil, on the two pivot points shown in the diagram, and work -in by moving the bolt forwards and backwards. Wipe off excessive grease. Preferred grease is 'napier g95 gun grease' On return from every shooting session, wipe all over the exterior with an oily rag to preserve the surface finish during storage.

A small drop of oil should be applied to the magazine O ring to keep it moist, and increase its life span.

STOCK ADJUSTMENTS

CHEEK PIECE

There are two adjustments available to the cheek piece. The whole assembly can be raised or lower by loosening the screw in the side on the butt stock using a 4mm allen. This allow the cheek piece to be positions at the perfect height for the shooter and scope they are using.

The cheek piece is also mounted on a ball joint at the top of the shaft. Loosening the two screws (access through the slots in the side of the cheek piece) allows the piece to be adjusted by minuet amounts to make the cheek piece as comfortable and exact as possible. Do not over tighten the screws.

SLING STUDS

The Ultimate sporter come fitted with a set of slings studs mounted to the butt stock and fore-end rail. The rail mount can be positioned anywhere along the rail length. To adjust the stud simply loosen the M6 screw inside the stud using a 3mm allen key and slide the stud into the required location then re-tigthen the screw. **Test the mount to ensure the screw is tighten enough to hold the weight of the rifle before mounting a sling. If the stud is too loose it may slide out of the rail during use.**

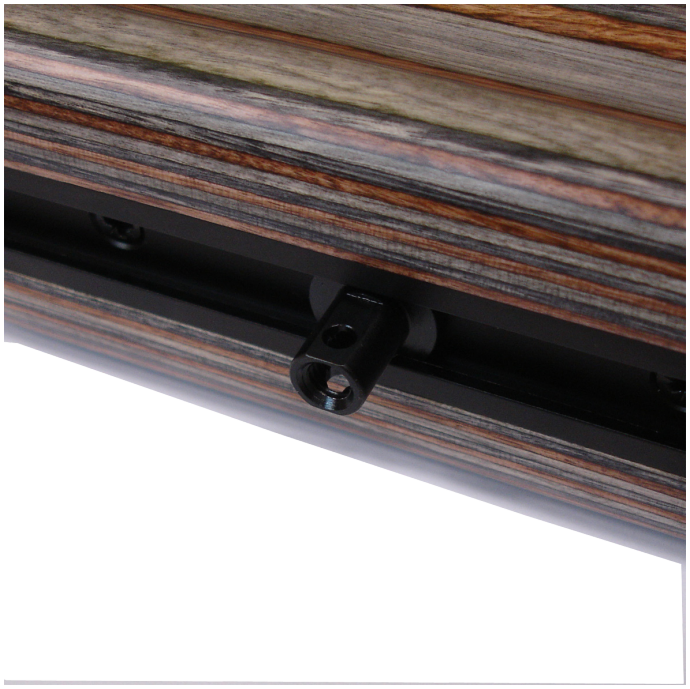

BUTT PAD

The butt pad has two adjustments available.

It can be adjusted to allow up and down movement for a higher or lower head position. This is done by loosening the screw in the middle of the pad and sliding into place then retightening the screw.

The second adjustment allow the length of the butt to be extended, this is achieved by adding spacers between the butt pad and the stock. With the pad slid up and down the screws that fix it to the wood can be accesed to allow extra spacers to be fitted. Please note that depending on the number or size of spacers required you may have to obtain longer screws.

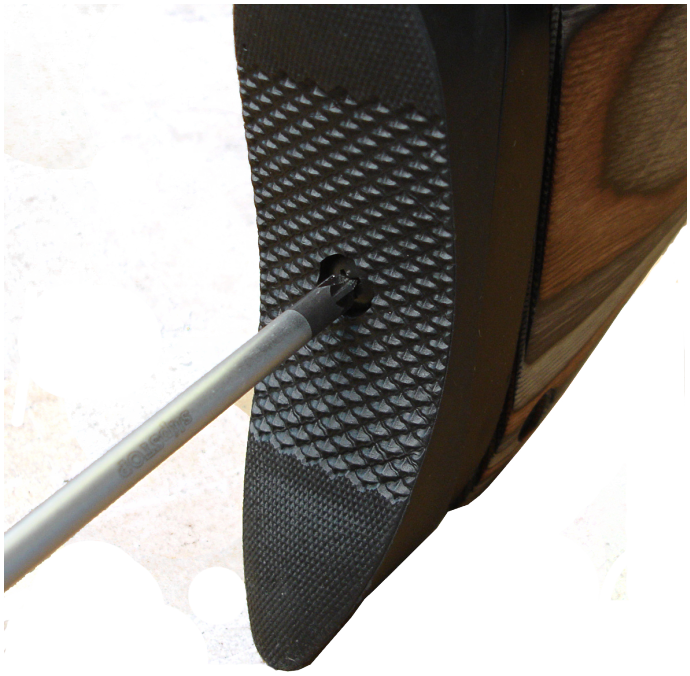

ITEM NO.	PART NUMBER	DESCRIPTION	QTY.	ITEM NO.	PART NUMBER	DESCRIPTION	QTY.
1	S507E-SL	FIRING VALVE BODY - ADJ	1	42	S331H	MAIN SPRING	1
	S507ENA-SL	FIRING VALVE BODY - NON ADJ		43	S530H	MAIN SPRING REAR GUIDE	1
2	RN234	BS213 O RING	2	44	S401A-BO	BARREL .22 - RIFLE	1
3	S340	STRIKER ROD	1		S401B-BO	BARREL .177 - RIFLE	
4	S306	FIRING VALVE SPRING	1		S401F-BO	BARREL .22 - CARBINE	
5	S640AT	GAUGE MOUNT	1		S401G-BO	BARREL .177 - CARBINE	
6	S427	6x1 O RING	1		S401J-BO	BARREL .25 - RIFLE	1
7	S536	BS008 O RING	1	45	S500F TRIGGER MECHANISM		1
8	RN219-9	BS 011 O RING	1	46	S550	SIDE PLATE	1
9	S645-2	INDICATOR GAUGE - ULTIMATE	1	47	S560	CAM PLATE	1
10	S335L	CYL TUBE - RIFLE	1	48	S515A	INDEXING POST ASSY	1
	RN235	CYL TUBE - CARBINE		49	S565	M3 X 8 SKT CAP	3
11	S491	FILLING VALVE BODY	1	50	RN135	M6 X 12 SOC CAP	1
12	S474	MALE CONNECTOR O RING	2	51	RN102A	M3 X 16 SKT CAP	5
13	S472	MALE CONNECTOR	1	52	TX236	M4 X 16 SKT CAP	1
14	S484	12x1.5 O RING	1	55	S505	MAGAZINE RETAINING CLIP	1
15	S473	FILLING VALVE	1	56	RN193	M3 X 6 SKT BTN HD	2
16	S327	BS005 O RING	1	57	JT416	M5 X 18 SKT BTN HD	1
17	S319	FILLING VALVE SPRING	1	60	TX234	3/32 x 1/4 BISSEL PIN	1
18	S471	FILTER	1	61	S555A-US	MAGAZINE - .177	1
19	S382H-SL	FRONT CLAMP	1		S555B-US	MAGAZINE - .22	
20	S484H	BARREL SUPPORT RING	1		S555C-US	MAGAZINE - .25	
21	TX228	M4 X 4 SKT SET FL PT	2	62	S402AH	BARREL SEAL HOLDER - .22	1
22	RN113	M5 X 6 SOC SET FL PT	2		S402BH-2	BARREL SEAL HOLDER - .177	
23	S303	M3 X 4 SKT SET FL PT	1	63	FP121	BARREL SEAL - .177	1
25	E483BK	END CAP	1		S538	BARREL SEAL - .22	
26	S610H	BOLT HSE TO FIRING VALVE BODY SEAL	1		FP122	BARREL SEAL - .25	
27	S500H-SL	HIGH POWER BOLT HSE - ADJ	1	64	E160	M3 CRINKLE WASHER	2
	S500HNA-SL	HIGH POWER BOLT HSE - NON ADJ		65	S600H-SL	BARREL TUBE - RIFLE	1
28	S540A-SL	LOADING BOLT STEM - .177	1		S600HC-SL	BARREL TUBE - CARBINE	
	S540B-SL	LOADING BOLT STEM - .22		66	E144	3 X 24 ROLLER	1
	S540C-SL	LOADING BOLT STEM - .25		67	S541	LOADING BOLT BEARING	1
29	S140	LOADING BOLT DETENT BUFFER - . 22 & .25	1	68	TX227	BUFFER	1
	S142	LOADING BOLT DETENT BUFFER - .177		93	S370H	FIRING VALVE ASSEMBLY	1
30	S501-SL	BOLT HSE BUSH - .22	1	94	S360H	POT	1
	S502-SL	BOLT HSE BUSH - .177		95	RN191	M3 X 5 SKT SET CONE PT	1
	S504-SL	BOLT HSE BUSH - .25		96	S524	M3 X 4 SKT SET CONE PT (ADJ MODELS ONLY)	1
31	S130	COCKING ARM PIVOT BLOCK	1	97	S508	POWER ADJUSTER KNOB (ADJ MODELS ONLY)	1
32	S322	M4 X 12 CSK SKT	1	98	S517	3/32 X 1/4 pin (ADJ MODELS ONLY)	1
33	E125	COCKING ARM	1	99	S519	POWER ADJ O RING (ADJ MODELS ONLY)	2
34	S541-1	BEARING SHIM	1	100	S562	2.5x8 DOWEL PIN (ADJ MODELS ONLY)	1
35	S542	SIDE LEVER BUSH - FAC	1	101	S522	SPRING (ADJ MODELS ONLY)	1
36	S264	COCKING LINK	1	102	S600-3	BARREL TUBE SUPPORT	1
37	E127	3x11.8 ROLLER	1	103	S600-4	BARREL SUPPORT O RING	2
38	S355H-SL	M4x16 SCREW	1	104	PS224	BAFFLE- RIFLE	5
39	S520E	STRIKER	1			BAFFLE - CARBINE	3
40	S520-1	BUSH	2	105	S133	SHROUD INSERT	1
41	S356H	STRIKER SCREW	1	106	FP134	THREAD PROTECTOR	1

Items not shown in the above list:

S475 - Filling adaptor

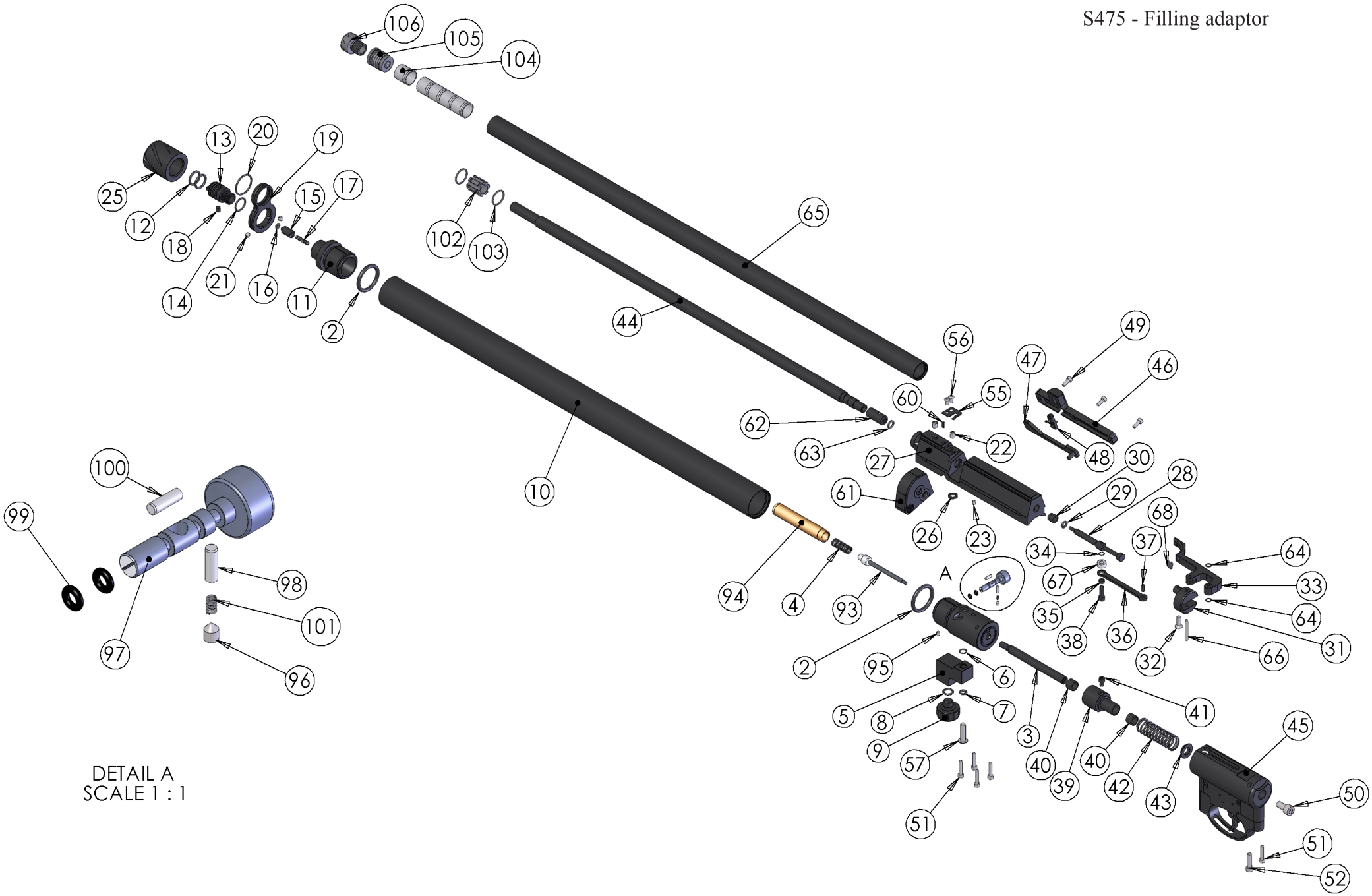

ITEM NO.	PART NUMBER	DESCRIPTION	QTY.	ITEM NO.	PART NUMBER	DESCRIPTION	QTY.
24	S765	M6 X 6 SOC SET FL PT	1	78	S780	No6x1/2" POZI C/SUNK - BLACK	2
53	S625	M6 X 40 SKT CAP	1	79	S740	CHEEK PIECE PILLAR	1
54	PS418	M5 X 20 SKT CAP	1	80	E425	ADJUSTER LOCKING BUSH	1
57	JT416	M5 X 18 SKT BTN HD	3	81	S770-PT1	CHEEK PIECE TOP CLAMP - PT1	1
58	RN430	M5 X 12 SKT BTN	2	82	S770-PT2	CHEEK PIECE TOP CLAMP - PT 2	1
59	S641	M5 X 25 SKT BTN	2	83	RN431	WASHER	7
69	S676-PT1	ULTIMATE SPORTER - MAIN STOCK	1	84	E335	CHEEK PIECE RAIL	1
70	S745	RAIL	1	85	E340	RAIL NUT	2
71	S750	No 6 3/8" POZI CSK	6	86	S676-PT2	ULTIMATE SPORTER - CHEEK PIECE	1
72	S640R-BK	STOCK RING	1	87	CZ078	SLEEVE NUT	2
73	S655	6 X 12 X 1.5 WASHER	1	88	CZ028-1	4mm SPACER	1
74	S760-PT2	FRONT SLING MOUNT - PT2	1	89	CZ080-1	BUTT PAD	1
75	S760-PT1	FRONT SLING MOUNT - PT1	1	90	CZ080-2	BUTTPAD BACKING PLATE	1
76	S775	CHEEK PIECE PILLAR BOTTOM PLATE	1	91	CZ080-4	LOCKING PLATE	1
77	S755	REAR SLING MOUNT	1	92	CZ080-3	M5 X 16 CHEESE HD	1

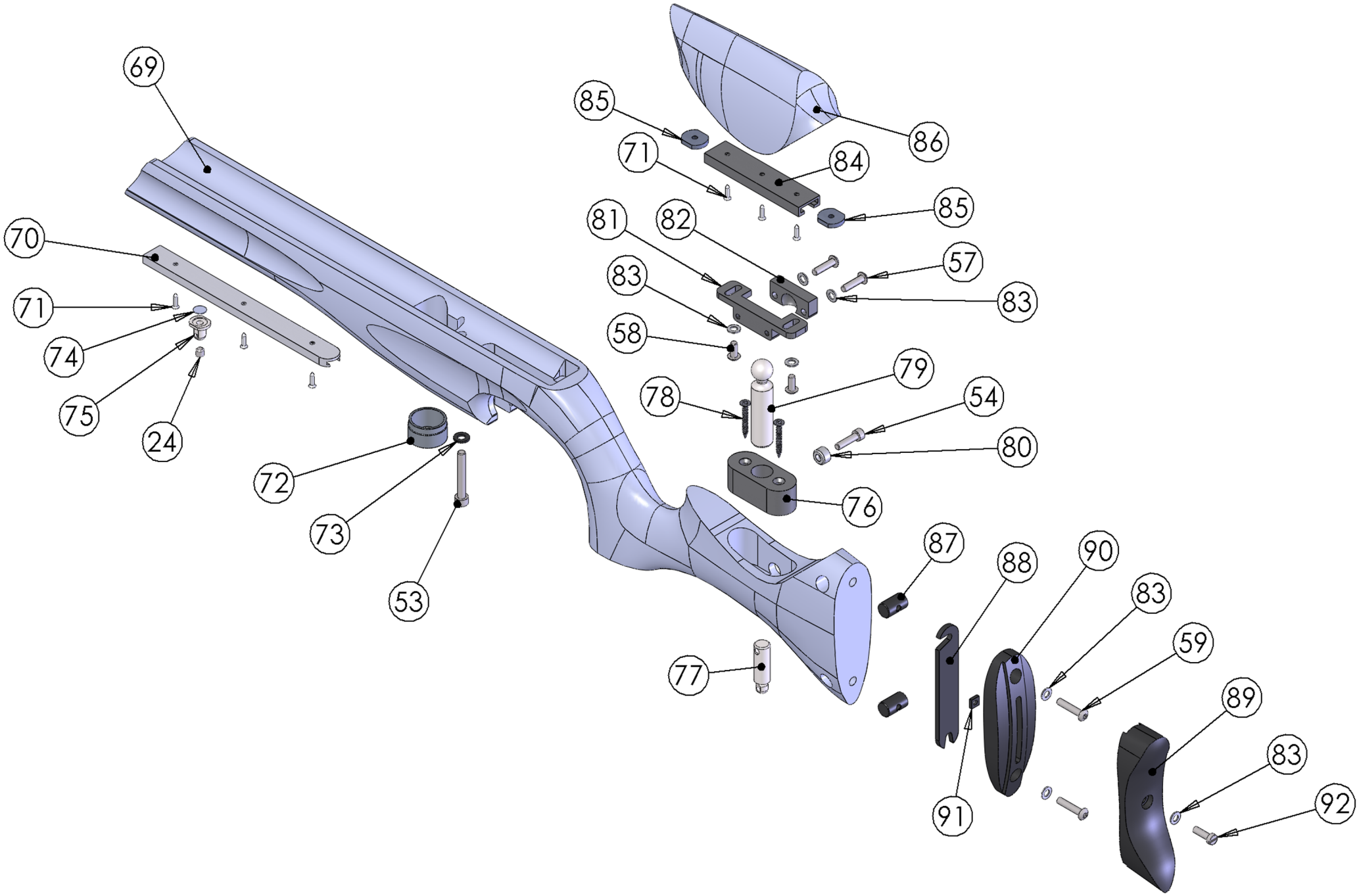
69
70
71
74
75
24
72
73
53
77
85
71
86
84
85
81
82
57
83
83
58
79
78
54
80
76
87
88
90
83
59
89
83
92
91

ITEM NO.	PART NUMBER	DESCRIPTION	QTY.	ITEM NO.	PART NUMBER	DESCRIPTION	QTY.
1	S313	CHASSIS	1	15	TX432	ADJUSTER SCREW LOCKING PAD	1
2	S320-2	TOP SEAR	1	16	RN191	SCREW	1
3	S321-2	BOTTOM SEAR	1	17	TX381	SCREW	1
4	S325-2	MIDDLE SEAR	1	18	S319	FILLING VALVE SPRING	1
5	S420S-2	TRIGGER BLADE - ANODIZED	1	19	TX236	SCREW	1
	S420GS-2	TRIGGER BLADE - GOLD PLATED		20	S496	SCREW	1
6	S318	COVER PLATE	1	21	TX460	SCREW	1
7	S314	TRIGGER GUARD	1	22	S316	SCREW	1
8	S310-SL	STRIKER BODY	1	23	S495	TOP SEAR SPRING	1
9	TX398	PIN	1	24	S311	TRIGGER LOAD SPRING	1
10	S326	PIN	3	25	RN106	SCREW	2
11	S523	BALL BEARING	1	26	S322	SCREW	1
12	S522	SAFETY BUTTON SPRING	1	27	S521-2A	SAFETY BUTTON - PART ONE	1
13	S524	SCREW	1	28	S521-2B	SAFETY BUTTON - PART TWO	1
14	S421	SCREW	2	29	S526	SAFETY BUTTON O RING	1

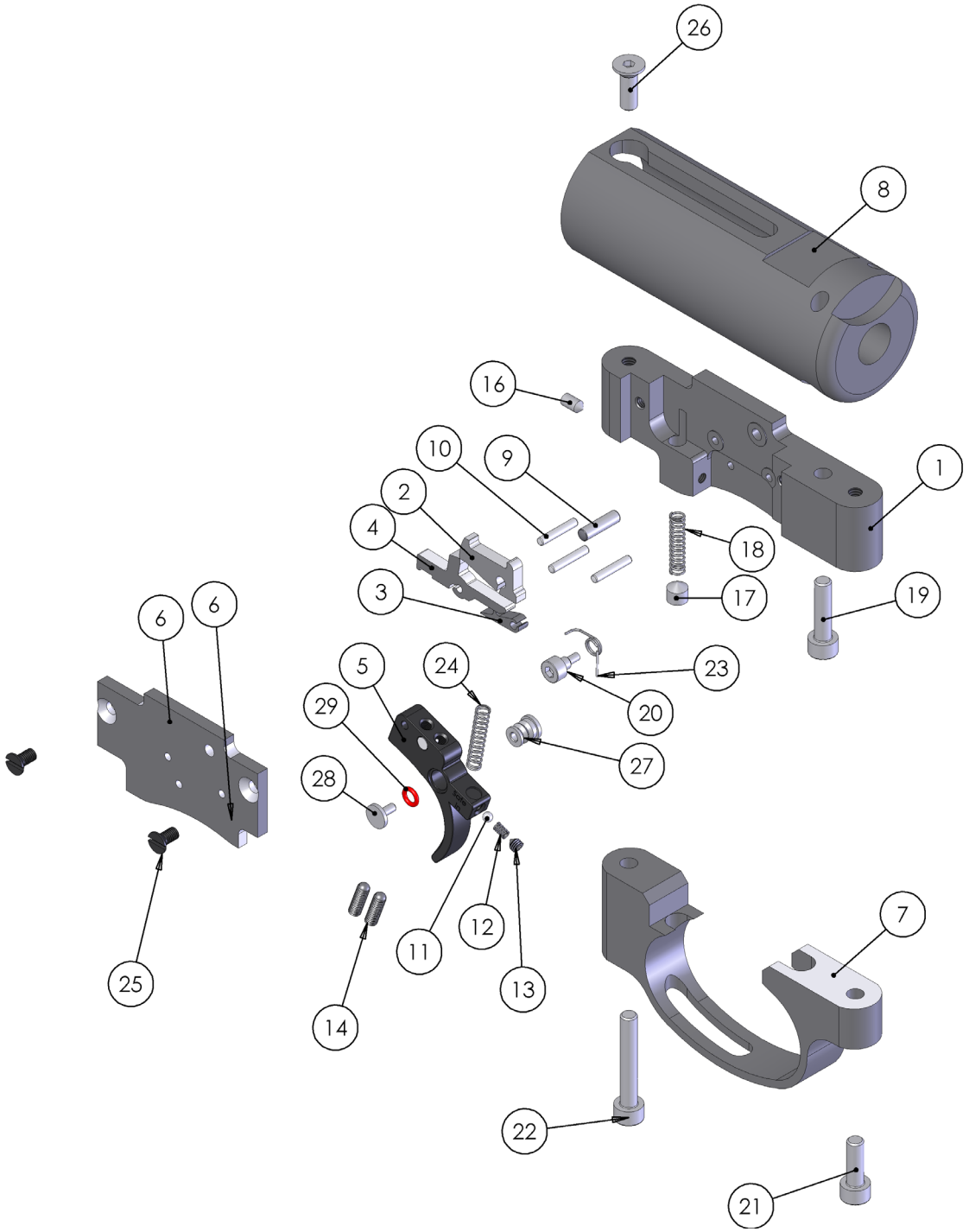

Notes:

Air Arms, Unit 6, Hailsham Industrial Park, Diplocks Way, Hailsham, East Sussex, England BN27 3JF.

Tel: 01323 845853. Fax: 01323 440573.
Website: www.air-arms.co.uk
Email: general@air-arms.co.uk